REV	CONTENT	CHK	DATE
V0.0	CONTENT	MYZ	22.10.12

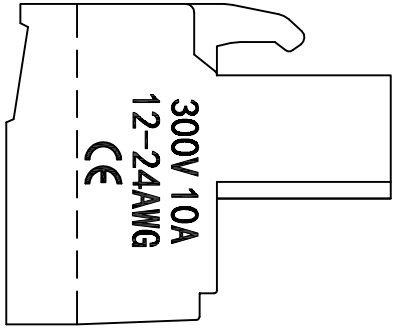

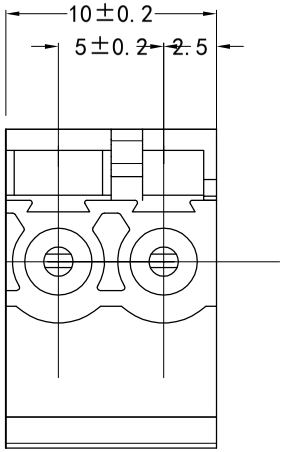

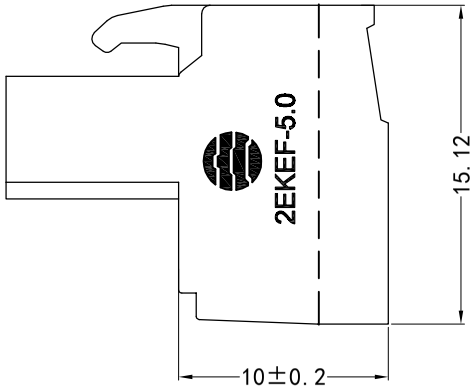

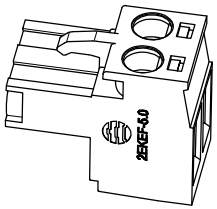

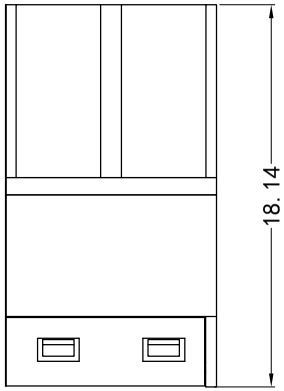

UL 标准/UL Standard:	B	C	D
额定电压/电流/Rated Voltage(V)/Current(A)	300/10	/	300/10
IEC 标准/IEC Standard:			
过压类别/Overvoltage Category/污染等级/Pollution Degree	Ⅲ/3	Ⅲ/2	II/2
额定电压/电流/Rated Voltage(V)/Current(A)	250/10	320/10	400/10
额定脉冲电压(KV)/Rate Impulse Voltage(KV)	4	4	4
使用温度范围/Operating temperature(°C)	−40~+105		
符合RoHS环保要求/Conform to RoHS	Yes		

Total Pitch Tolerances in mm									Nominal dimension range in mm									⊥		÷	—		//
over 0 to 30	over 30 to 53	over 53 to 70	over 70 to 90	over 90 to 115	over 115 to 150	over 150 to 250	over 250 to 350	over 350 to 500	over 0 to 30	over 30 to 53	over 53 to 70	over 70 to 90	over 90 to 115	over 115 to 150	over 150 to 200	over 200 to 250	over 250 to 320	over 0 to 10	over 10	all	over 0 to 100	over 100 to 150	over 150
±0.18	±0.20	±0.25	±0.3	±0.35	±0.44	±0.60	±0.70	±0.85	±0.20	±0.25	±0.30	±0.35	±0.44	±0.55	±0.70	±0.80	±0.90	0.2	0.3	0.3	0.2	0.3	0.5

ITEM	NAME OF PART			Q"TY	MATERIAL			
DWG.	MYZ	DATE	22.10.12	SIZE	A4	UNITS	mm	SHEET/OF 1 / 1
CHK.		DATE		SCALE	1:1			
APP.		DATE		NAME	2EKEF-5.0-02P			
® 宁波三安电子科技有限公司 Sanan Electrical Technology Co.Ltd				DWGNO.	XXXX			